BOSCH

# Professional

## GAS 400 A

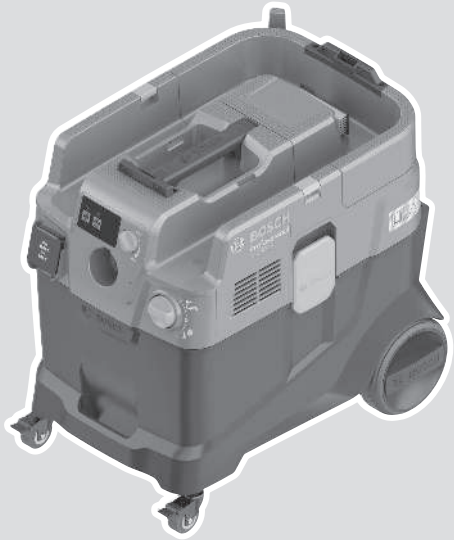

**Robert Bosch Power Tools GmbH**
70538 Stuttgart
GERMANY

**www.bosch-pt.com**

**1 609 92A 91N** (2026.06) T / 21

1 609 92A 91N

**en** Original instructions

English ..... Page 9

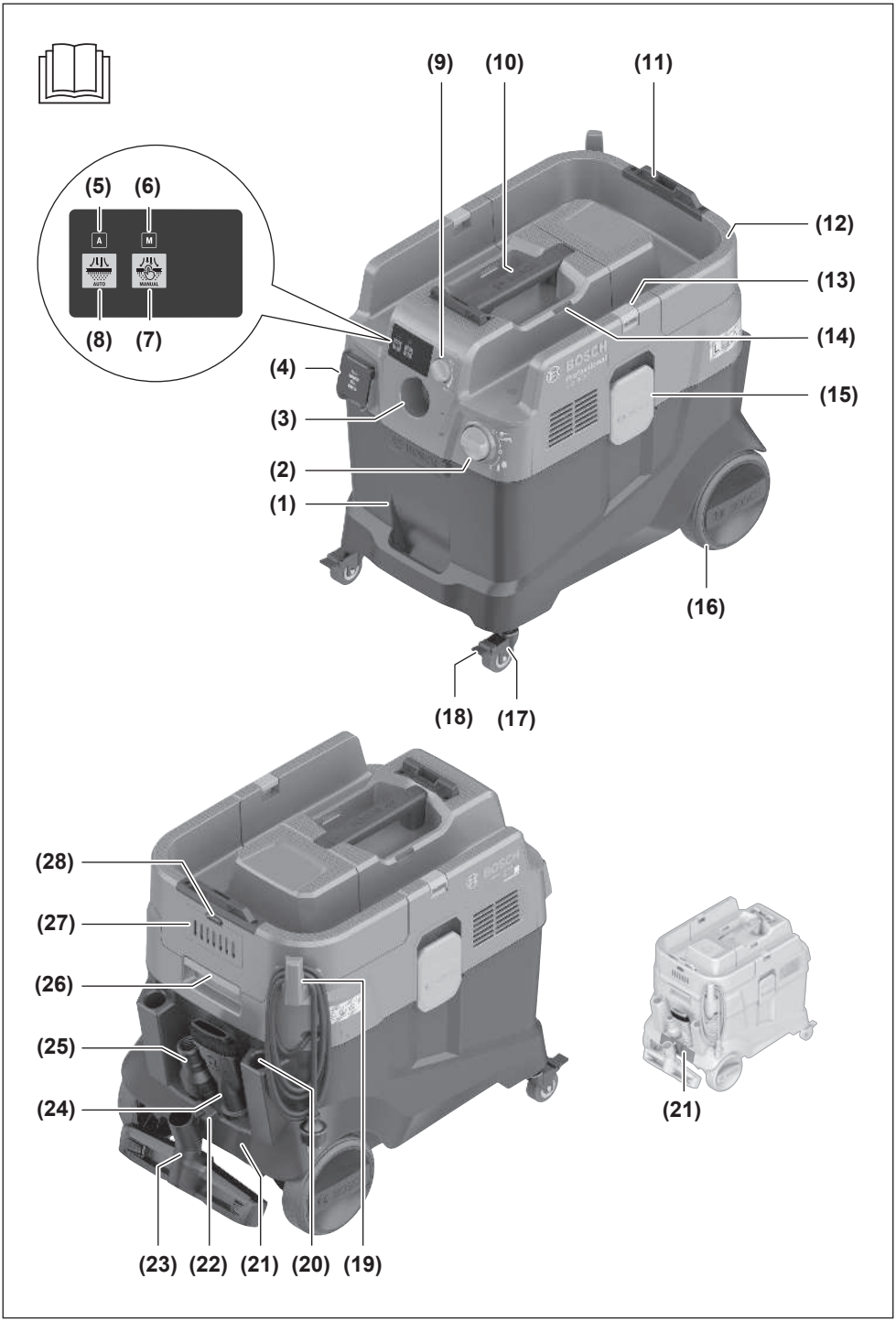
(9)
(10)
(11)
(5)
(6)
A
M
AUTO
MANUAL
(8)
(7)
(12)
(13)
(14)
(4)
(15)
(3)
(2)
(1)
(16)
(18)
(17)
(28)
(27)
(26)
(25)
(24)
(21)
(23)
(22)
(21)
(20)
(19)

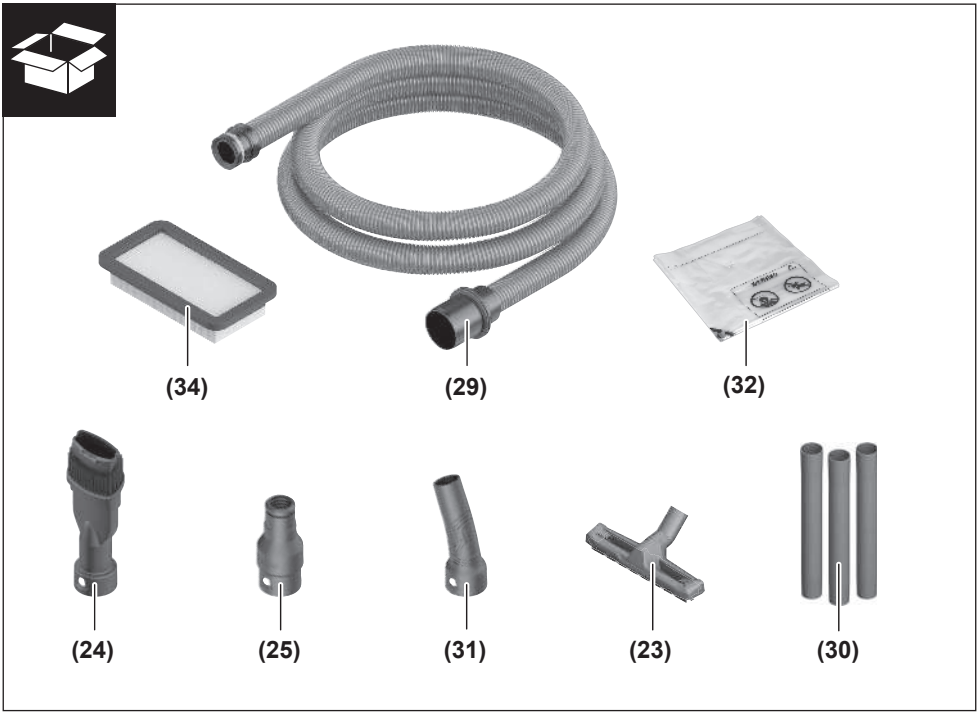
(34)
(29)
(32)
(24)
(25)
(31)
(23)
(30)

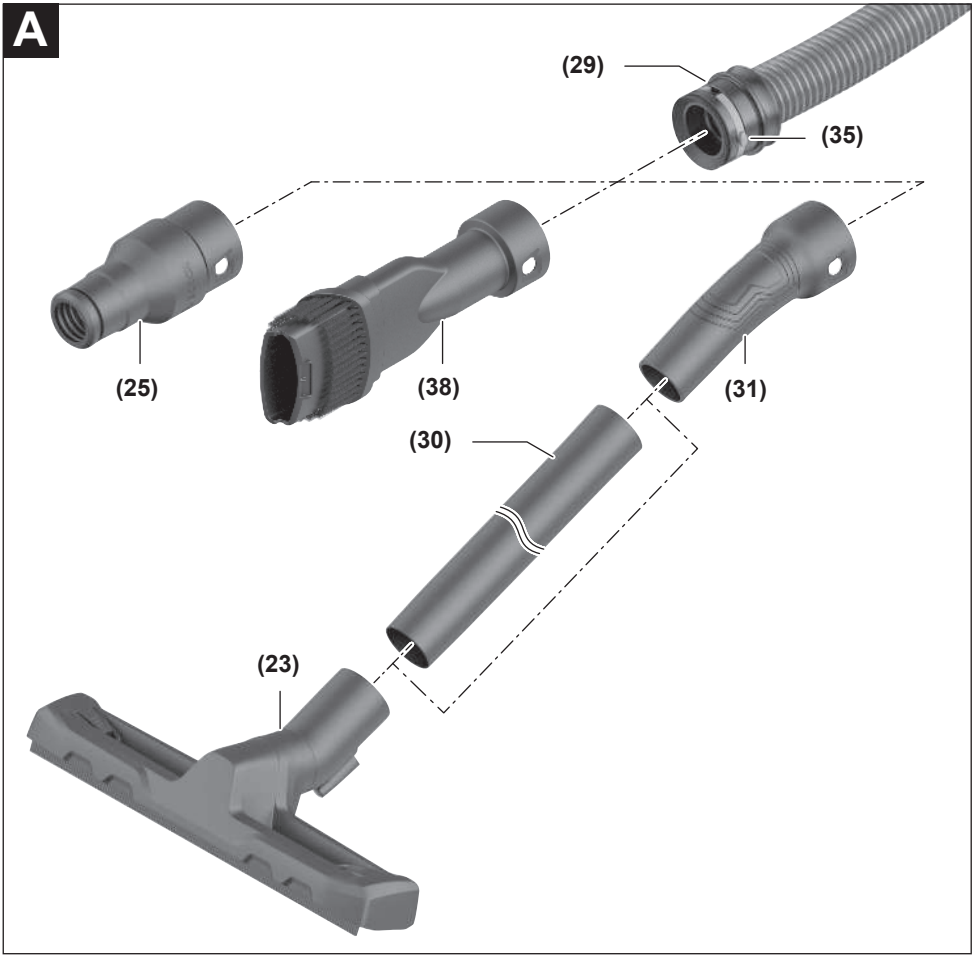
A
(29)
(35)
(25)
(38)
(31)
(30)
(23)

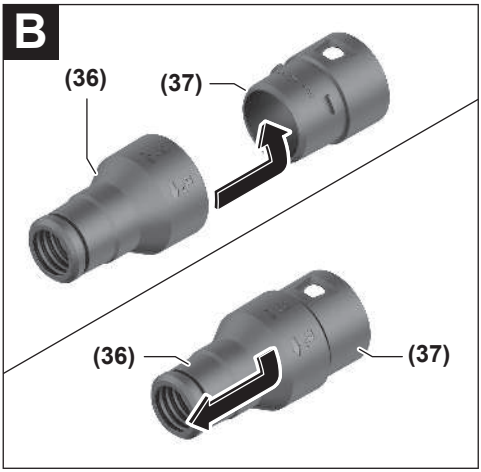
B
(36)
(37)
(36)
(37)

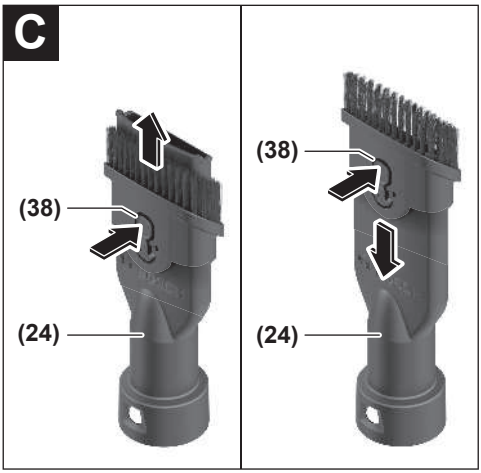
C
(38)
(24)
(38)
(24)

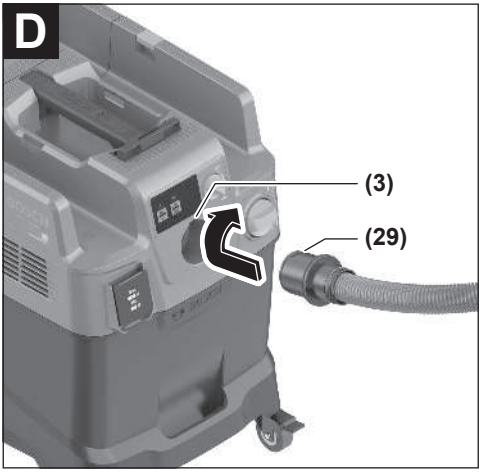
D
(3)
(29)

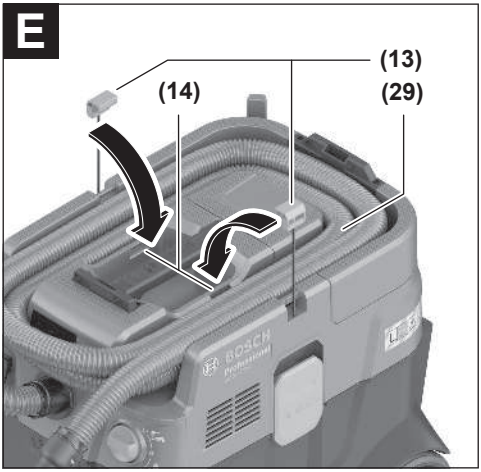
E
(13)
(14)
(29)

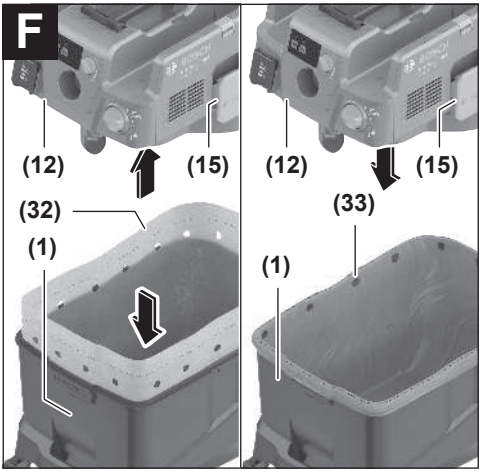
F
(12)
(15)
(32)
(1)
(12)
(15)
(33)
(1)

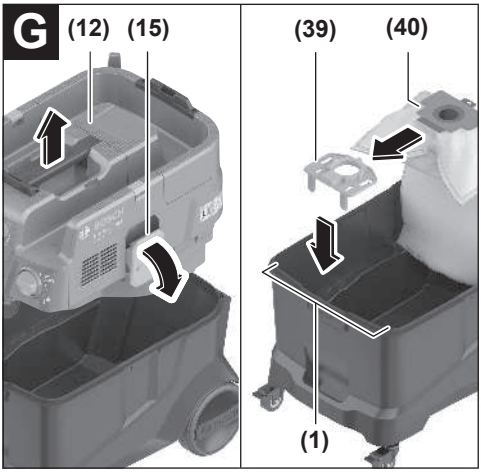
G
(12)
(15)
(39)
(40)
(1)

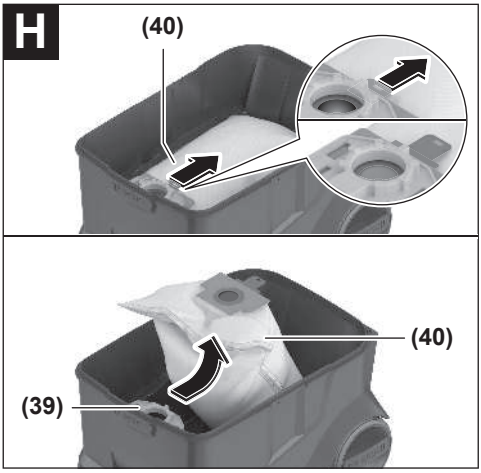
H
(40)
(40)
(39)

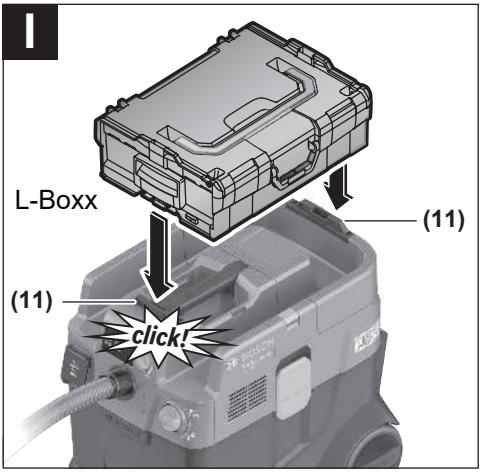
I
L-Boxx
(11)
(11)
click!

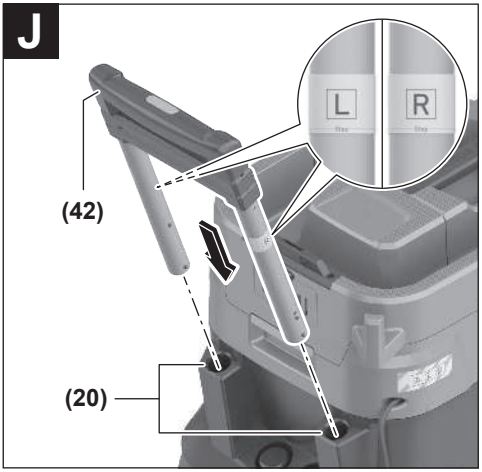
J
L
R
(42)
(20)

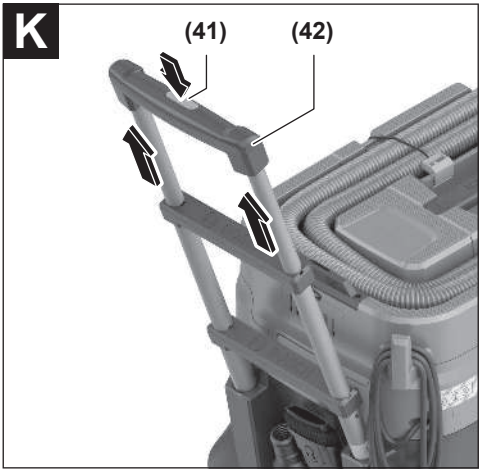
K
(41)
(42)

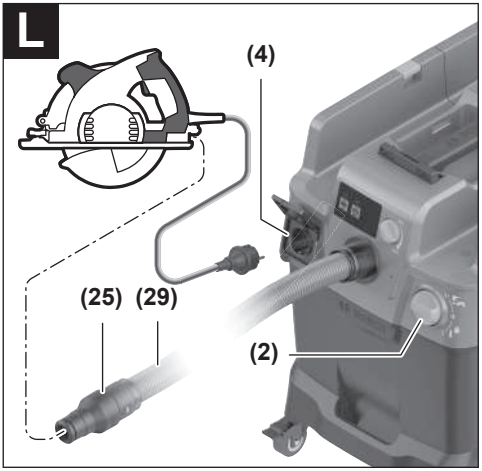
L
(4)
(25)
(29)
(2)

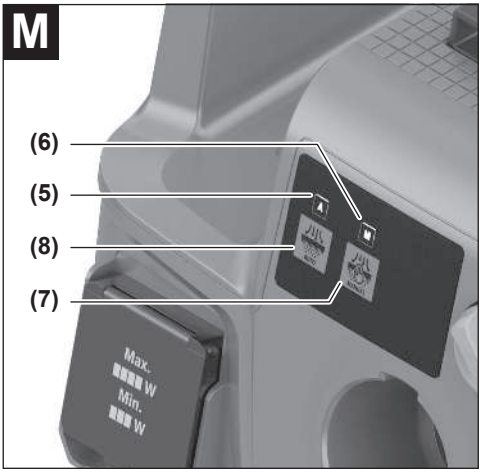
M
(6)
(5)
(8)
(7)
Max.
W
Min.
W

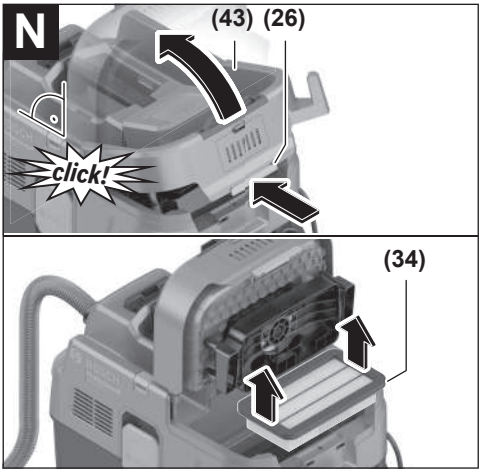
N
(43)
(26)
click!
(34)

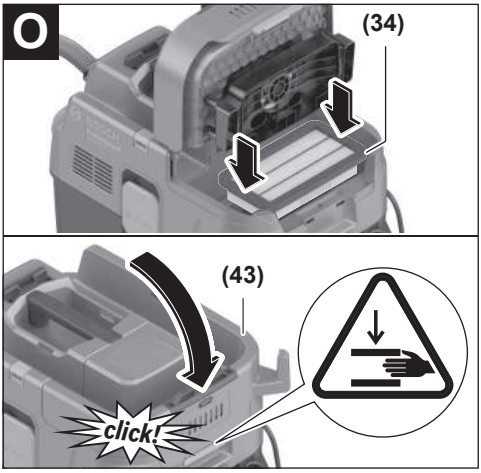
O
(34)
(43)
click!

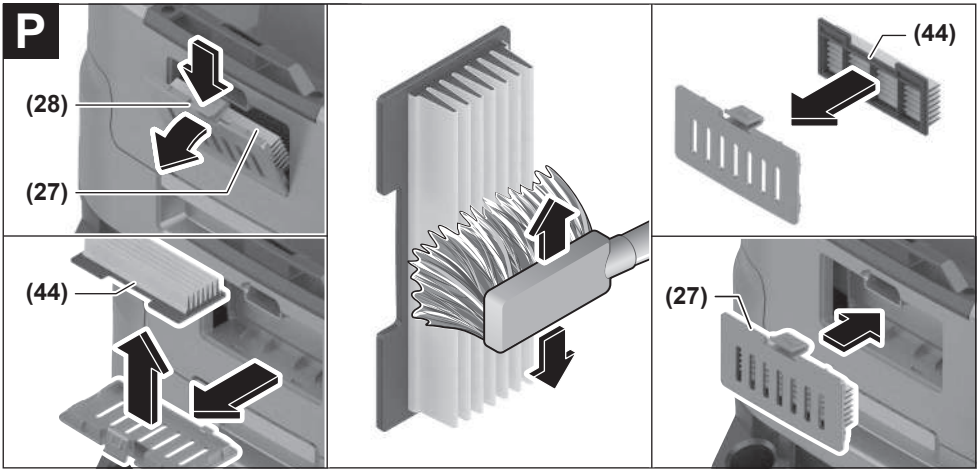
P
(28)
(27)
(44)
(44)
(27)

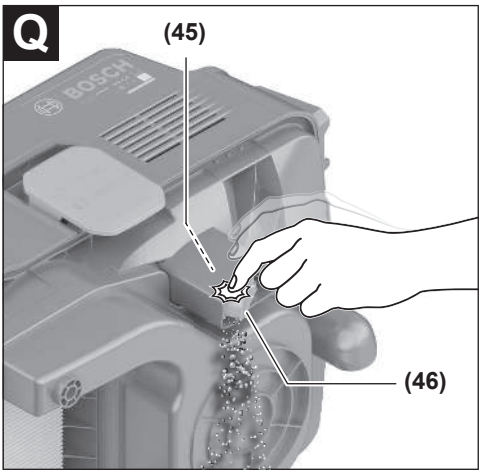
Q
(45)
BOSCH
(46)

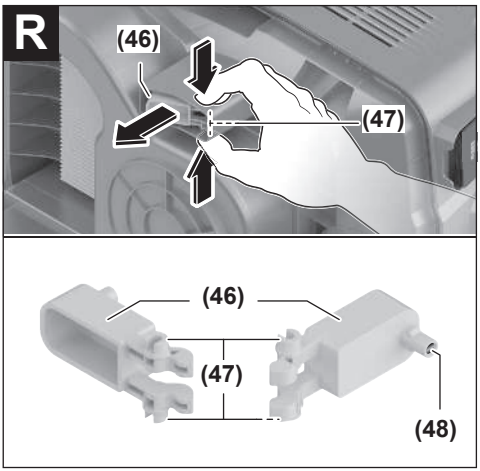
R
(46)
(47)
(46)
(47)
(48)

# English

## Safety instructions for dust extractors

**Read all the safety information and instructions.** Failure to observe the safety information and follow instructions may result in electric shock, fire and/or serious injury.

**Save all warnings and instructions for future reference.**

- ▶ **This dust extractor is not intended for use by children or persons with physical, sensory or mental impairments. It should not be used by persons who have insufficient experience and knowledge.** Otherwise, there is a risk of operating errors and injuries.
- ▶ **Supervise children.** This will ensure that children do not play with the dust extractor.
- ▶ **Comply with all safety provisions for the substances being extracted.**
- ▶ **Do not vacuum beech or oak wood dust, rock dust or asbestos.** These substances are considered carcinogenic.

⚠ **WARNING** **Only use the dust extractor if you have been adequately informed about the use of the equipment, the substances to be vacuumed and how to dispose of these safely.** Thorough instruction on how to use the equipment prevents accidental misuse and injuries.

⚠ **WARNING** **The dust extractor is suitable for vacuuming dry substances, and can also be used to vacuum liquids when taking appropriate measures.** The penetration of liquids increases the risk of an electric shock.

- ▶ **Do not use the dust extractor to vacuum combustible or explosive liquids, such as petrol, oil, alcohol or solvents. Do not vacuum hot, burning or explosive dust. Do not operate the dust extractor in areas subject to explosion hazards.** Dust, vapours and liquids can ignite or explode.

⚠ **WARNING** **Only use the socket for the purpose stipulated in the operating manual.**

⚠ **WARNING** **If you notice a foam or water leak, switch off the dust extractor immediately and empty the container.** Otherwise, the dust extractor can become damaged.

- ▶ **NOTE: The dust extractor must only be stored indoors.**
- ▶ **NOTE: Clean the liquid fill level sensors regularly and check whether they are damaged.** Otherwise, the equipment may not function properly.
- ▶ **If operating the dust extractor in a damp location is unavoidable, use a residual current device (RCD).** Use of an RCD reduces the risk of electric shock.
- ▶ **Always check the dust extractor, cable and plug before use. Do not use the dust extractor if you discover any damage. Do not open the dust extractor yourself. It should be repaired exclusively by a qualified professional using only genuine spare parts.** Damaged dust extractors, cables and plugs increase the risk of electric shock.
- ▶ **Do not crush the cable or run the device over it. Do not pull on the power cable to pull the plug out of the socket or to move the dust extractor.** Damaged cables increase the risk of an electric shock.
- ▶ **Pull the plug out of the socket before cleaning or performing maintenance on the dust extractor, making tool adjustments, changing accessories or putting away the dust extractor.** This safety measure prevents the dust extractor from being started accidentally.
- ▶ **Ensure that the workplace is well ventilated.**
- ▶ **The dust extractor should be repaired exclusively by a qualified professional using only genuine spare parts.** This will ensure that the safety of the dust extractor is maintained.

⚠ **WARNING** **The dust extractor contains dust particles that pose a risk to health. Emptying and maintenance procedures, including the disposal of dust containers, should only be carried out by professionals. Suitable protective equipment is required. Do not operate the dust extractor unless the complete filter system is correctly inserted.** Otherwise, you are putting your health at risk.

- ▶ **Before using the equipment for the first time, check that the vacuum hose is in perfect condition. Leave the vacuum hose fitted to the dust extractor while doing this so that no dust escapes accidentally.** Otherwise, you may end up inhaling dust particles.
- ▶ **Do not sit on the dust extractor.** You can damage the dust extractor this way.
- ▶ **Take care when using the power cable and the vacuum hose.** Improper use of these can put other people at risk.
- ▶ **Do not clean the dust extractor by spraying a jet of water directly at it.** Water entering the top of the dust extractor will increase the risk of electric shock.
- ▶ **Connect the dust extractor to a properly earthed power supply system.** The plug socket and extension cable must have a fully functioning protective conductor.
- ▶ **Products sold in GB only:**
  Your product is fitted with an BS 1363/A approved electric plug with internal fuse (ASTA approved to BS 1362). If the plug is not suitable for your socket outlets, it should be cut off and an appropriate plug fitted in its place by an authorised customer service agent. The replacement plug should have the same fuse rating as the original plug.
  The severed plug must be disposed of to avoid a possible shock hazard and should never be inserted into a mains socket elsewhere.

- ▶ **Do not use the socket on the dust extractor when wet vacuuming or in the humid condition.** Contact with water poses a risk of short circuit or electric shock.

# Symbols

The following symbols may provide you with important information pertaining to the use of your dust extractor. Please take note of these symbols and their meaning. Knowing what these symbols mean will help you to use your extractor more effectively and more safely.

| Symbols and their meaning | |
|---|---|
| | **WARNING! Read all the safety and general instructions.** Failure to observe the safety and general instructions may result in electric shock, fire and/or serious injury. |
| | Dust extractor from dust class L in accordance with IEC/EN 60335-2-69 for the **dry extraction** of harmful dusts with an exposure limit of > 1 mg/m³ |
| | **WARNING! The dust extractor contains dust particles that pose a risk to health. Emptying and maintenance procedures, including the disposal of dust containers, should only be carried out by professionals. Suitable protective equipment is required. Do not operate the dust extractor unless the complete filter system is correctly inserted.** Otherwise, you are putting your health at risk. |
| | |
| **max. 1 L-Boxx max. 15 kg** | Only attach a maximum of one L-BOXX.<br>The weight of the L-BOXX along with its contents must not exceed 15 kg. |
| | **Do not hang the dust extractor on a crane hook, e.g. in order to transport it.** The dust extractor is not suitable for moving with a crane. There is a risk of injury and damage if you do this. |
| | **Do not sit or stand on the dust extractor.** The dust extractor may tip over and become damaged if you do this. This poses a risk of injury. |

| Symbols and their meaning | |
|---|---|
| | |
| | **A**<br>Automatic filter cleaning mode indicator LED |
|  | **M**<br>Manual filter cleaning mode indicator LED |
| | Button for automatic filter cleaning |
| | Button for manual filter cleaning |
| | **Automatic start/stop function**<br>Extracts dust that accumulates from working power tools;<br>the dust extractor switches on automatically and off again with a time delay.<br>The plug socket on the dust extractor is constantly live. |
| | **Switching off**<br>The plug socket on the dust extractor is without power. |
| | **Extraction**<br>Extracting dust deposits and dust from the extraction system.<br>The plug socket on the dust extractor is constantly live. |
| | **Min/Max**<br>Continuous regulation of suction power:<br>– Maximum suction power for applications with a high level of dust generation<br>– Reduced suction power for applications that generate a low level of dust, and also to regulate the suction between the connected power tool and the surface of the workpiece (e.g. when sanding) |
| 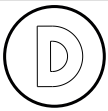 | Data logging is activated in this dust extractor. |
| **max. 2100 W**<br>**min. 100 W** | Permitted connected load of the connected power tool (country-specific) |

# Product Description and Specifications

Please observe the illustrations at the beginning of this operating manual.

## Intended Use

The dust extractor is intended for collecting, vacuuming, conveying and separating non-flammable dry dusts and non-flammable liquids. The dust extraction capability of the dust extractor has been tested and corresponds to dust class L. It is suitable for the increased demands in professional use, e.g. in trade, industry and workshops.

Dust extractors from dust class L in accordance with IEC/EN 60335-2-69 may only be used to vacuum and extract harmful dust with an exposure limit of > 1 mg/m$^3$.

Only use the dust extractor if you can fully evaluate all functions and carry them out without restrictions, or if you have received corresponding instructions.

## Product Features

The numbering of the product features refers to the representation of the dust extractor on the graphic pages.

**(1)** Container
**(2)** Main switch
**(3)** Hose adapter
**(4)** Plug socket for power tool
**(5)** Indicator LED **A**: Automatic filter cleaning mode
**(6)** Indicator LED **M**: Manual filter cleaning mode
**(7)** Button for manual filter cleaning
**(8)** Button for automatic filter cleaning
**(9)** Suction power regulator
**(10)** Carrying handle
**(11)** L-BOXX holder
**(12)** Top part of dust extractor
**(13)** Pull strap
**(14)** Fastening opening
**(15)** Catch for top part of dust extractor
**(16)** Wheel
**(17)** Castor
**(18)** Castor brake
**(19)** Cable holder
**(20)** Guide rails for the retractable guide handle
**(21)** Rear handle section
**(22)** Holder for floor nozzle
**(23)** Floor nozzle
**(24)** Combi brush nozzle
**(25)** Combi power tool adapter
**(26)** Closing flap for filter cover
**(27)** Pre-filter cover
**(28)** Pre-filter release button
**(29)** Vacuum hose
**(30)** Suction tube
**(31)** Curved nozzle
**(32)** Plastic bag
**(33)** Air passage opening
**(34)** Flat-pleated filter
**(35)** Vacuum hose snap fastener
**(36)** PowerTool adapter (front part)
**(37)** PowerTool adapter (rear part)
**(38)** Combi brush nozzle release button
**(39)** Fleece filter bag holder[a)]
**(40)** Fleece filter bag[a)]
**(41)** Guide handle snap fastener[a)]
**(42)** Retractable guide handle[a)]
**(43)** Filter cover for flat-pleated filter
**(44)** Pre-filter
**(45)** Fill level sensor
**(46)** Float
**(47)** Float locking mechanism
**(48)** Magnet

a) **This accessory is not part of the standard scope of delivery.**

## Technical data

| Wet/dry extractor | | GAS 400 A | GAS 400 A |
|---|---|---|---|
| Article number **3 601 JM0 ...** | | **... 020/... 0F0**<br>**... 080/... 0E0/... 0N0**<br>**... 0K0**<br>**... 0L0/... 070**<br>**... 0H0**<br>**... 030** | **... 0D0/... 0G0**<br>**... 0C0**<br>**... 060** |
| Rated power input | W | 1200 | 1200 |
| Frequency | Hz | 50–60 | 60 |
| Container volume (gross) | l | 40 | 40 |
| Net volume (dry) | l | 28 | 26 |

| Wet/dry extractor | | GAS 400 A | GAS 400 A |
|---|---|---|---|
| Net volume (liquid) | l | 20 | 18 |
| Vacuum pressure[A)] | | | |
| – Dust extractor | hPa | 200 | 180 |
| – Turbine | hPa | 230 | 200 |
| Flow rate[A)] | | | |
| – Dust extractor | l/s | 28 | 26 |
| | $m^3/h$ | 100.8 | 93.6 |
| – Turbine | l/s | 71.5 | 70 |
| | $m^3/h$ | 257 | 252 |
| Dust class | | L | L |
| Weight[B)] | kg | 14.0 | 14.5 |
| Protection class | | ⏚/I | ⏚/I |
| Protection rating | | IPX4 | IPX4 |

A) Measured using a vacuum hose 4 m long and 28 mm in diameter

B) Without mains connection cable

The specifications apply to the specified rated voltages. These specifications may vary at different voltages and in country-specific models.

Values can vary depending on the product, scope of application and environmental conditions. To find out more, visit www.bosch-professional.com/wac.

**Plug socket on the dust extractor**

| Permitted connected load of the connected power tool | | | |
|---|---|---|---|
| **3 601 JM0 ...** | **Rated voltage** | **Maximum power** | **Minimum power** |
| ... 020/... 0F0 | 230 V | 2100 W | 100 W |
| ... 080/... 0E0/... 0N0 | 220 V | 2100 W | 100 W |
| ... 0K0 | 220–230 V | 2100 W | 100 W |
| ... 0L0/... 070 | 220–240 V | 1660 W | 100 W |
| ... 0H0 | 220 V | 1000 W | 100 W |
| ... 030 | 230 V | 1100 W | 100 W |
| ... 0D0/... 0G0 | 127 V | 705 W | 100 W |
| ... 0C0 | 115 V | 525 W | 100 W |
| ... 060 | 110 V | 560 W | 100 W |

Permitted connected load of the connected power tool.
These values can differ for other country-specific models. Please take note of the information on the socket of the dust extractor.

## Noise/Vibration Information

Noise emission values determined according to **EN 60335-2-69**.

Typically the A-weighted sound pressure level of the dust extractor is **73** dB(A). Uncertainty K = **2** dB. The noise level when working can exceed the volume stated. **Wear hearing protection!**

Vibration values $a_h$ (continuous vibrations), $p_F$ (repeated shock vibrations) and uncertainty K determined according to **EN 60335-2-69**:

$a_h$ = **0.1** $m/s^2$ (K = **0.5** $m/s^2$), $p_F$ = **2** $m/s^2$ (K = **1** $m/s^2$)

# Assembly

▶ **Pull the plug out of the socket before cleaning or performing maintenance on the dust extractor, making tool adjustments, changing accessories or putting away the dust extractor.** This safety measure prevents the dust extractor from being started accidentally.

## Fitting the vacuuming accessories (see figure A)

The vacuum hose **(29)** has a clip system that can be used to connect vacuuming accessories (combi power tool adapter **(25)**, curved nozzle **(31)**, combi brush nozzle **(24)**).

**Fitting the curved nozzle**

– Push the curved nozzle **(31)** onto the vacuum hose **(29)** until you hear both snap fasteners **(35)** on the vacuum hose engage.

– To remove the adapter, press the snap fasteners **(35)** inwards and pull apart the components.

**Fitting the floor nozzle and tubes**

- If required, place the suction tubes **(30)** firmly inside one another and then attach them firmly to the curved nozzle **(31)**.
- Attach the floor nozzle **(23)** firmly to the suction tube **(30)** or the curved nozzle **(31)**.

**Fitting the combi power tool adapter**

The combi power tool adapter **(25)** consists of the PowerTool adapter (front part) **(36)** and the PowerTool adapter (rear part) **(37)**.

The combi power tool adapter **(25)** is compatible with Bosch power tools.

With an inner diameter of 38.5 mm and an outer diameter of 45 mm, the PowerTool adapter (rear part) **(37)** can be used for power tools manufactured by other brands.

Place the PowerTool adapter (front part) **(36)** on the PowerTool adapter (rear part) **(37)** and connect both adapters by twisting them in opposite directions (see figure **B**).

Push the combi power tool adapter **(25)** onto the vacuum hose **(29)** until you hear both push buttons **(35)** on the vacuum hose click into place.

To remove the adapter, press the push buttons **(35)** inwards and pull the combi power tool adapter out of the vacuum hose.

To separate the two adapters, loosen the connection by twisting in opposite directions and pulling the adapters apart.

**Fitting the Combi Brush Nozzle**

Push the combi brush nozzle **(24)** onto the vacuum hose **(29)** until you hear both push buttons **(35)** on the vacuum hose click into place.

To remove the adapter, press the snap fasteners **(35)** inwards and pull apart the components.

**Adjusting the Combi Brush Nozzle (see figure C)**

You can use the combi brush nozzle **(24)** as a crevice nozzle or brush.

Press the release button **(38)** and push the brush forwards to use the combi brush nozzle **(24)** as a brush.

Press the release button **(38)** and pull the brush backwards to use the combi brush nozzle **(24)** as a crevice nozzle.

## Fitting the vacuum hose (see figure D)

Attach the vacuum hose **(29)** to the hose adapter **(3)** and turn it clockwise as far as it will go.

**Note:** The friction generated by the dust in the vacuum hose and accessory during extraction causes an electrostatic charge that the user may experience as static discharge (depending on environmental factors and their physiological state).
Bosch generally recommends using an anti-static vacuum hose (accessory) to vacuum up fine dust and dry materials.

**Attaching the Vacuum Hose to the Dust Extractor (see figure E)**

Wrap the fitted vacuum hose **(29)** into the compartment for the vacuum hose. Pull up both pull straps **(13)** and hook them into the fastening openings **(14)**.

## Inserting/removing the plastic bag (dry extraction) (see figure F)

Open both catches **(15)** and remove the top part of the dust extractor **(12)**.

For dry extraction, insert a plastic bag **(32)** into the container **(1)**.

Insert the plastic bag **(32)** into the container **(1)** with the inlet facing upwards.

Make sure that the plastic bag **(32)** touches all the inside walls of the container **(1)**.

Fold the rest of the plastic bag **(32)** over the edge of the container **(1)**. Make sure that the stop line of the plastic bag is positioned at the edge of the container and the air passage openings **(33)** are still in the container.

Put the top part of the dust extractor **(12)** back on and close the dust extractor using the catches **(15)**.

- ▶ **Ensure that the dust extractor is always properly closed.**

Seal the plastic bag **before** you remove it. Hold the bag together at the top and use a cord to tie up the bag.

## Inserting/Removing the Fleece Filter Bag (Dry Extraction) (see figures G-H)

A fleece filter bag **(40)** must be used for the dry extraction of dust class L materials.

Insofar as materials with or without an exposure limit of ≥ 1 mg/m$^3$ (dust class L materials) are extracted, these can be sucked straight into the container.

**Note:** Switch off the automatic filter cleaning when using the fleece filter bag (see "Automatic/Manual Filter Cleaning (see figure **M**)", page 15).

**⚠ WARNING** **The dust extractor contains dust particles that pose a risk to health.**

**Emptying and maintenance procedures, including the disposal of dust containers, should only be carried out by professionals. Suitable protective equipment is required. Do not operate the dust extractor unless the complete filter system is correctly inserted.** Otherwise, you are putting your health at risk.

Open the catches **(15)** and remove the top part of the dust extractor **(12)**.

For inserting put the fleece filter bag **(40)** on the fleece filter bag holder **(39)** and insert the fleece filter bag **(40)** with the fleece filter bag holder **(39)** into the container **(1)**.

For removing close the opening of the full fleece filter bag by pulling the catch. Pull the sealed fleece filter bag **(40)** out of the fleece filter bag holder **(39)** and remove it from the dust extractor.

Put the top part of the dust extractor **(12)** back on and connect the container **(1)** with the top part of the dust extractor **(12)** by closing the catches **(15)**.

### Attaching the L-Boxx (see figure I)

You can attach an L-Boxx to the top part of the dust extractor for transporting the extractor and to provide space-saving storage for extractor accessories and/or the power tool.

Attach the vacuum hose to the dust extractor (see figure **E**).

Click the L-Boxx onto the holders **(11)**.

- ▶ **Do not use the dust extractor with an L-Boxx attached.** This will raise the dust extractor's centre of gravity. The extractor may tip over. There is a risk of injury and damage if you do this.
- ▶ **Do not carry the dust extractor by the carrying handle of the attached L-Boxx.** The dust extractor is too heavy for the carrying handle of the L-Boxx. There is a risk of injury and damage if you do this.

### Installing the Retractable Guide Handle (see figures J–K)

**Note:** The retractable guide handle cannot be removed. When assembling, ensure that the guide handle is aligned correctly.

Before inserting the guide handle **(42)**, align it using the **R** (right) and **L** (left) markings.

Insert the guide handle **(42)** into the guide rails **(20)**.

Press the guide handle **(42)** down to the stop line until the guide handle audibly clicks into place.

Press the snap fastener **(41)** to change the length of the guide handle **(42)**.

## Operation

- ▶ **Pull the plug out of the socket before cleaning or performing maintenance on the dust extractor, making tool adjustments, changing accessories or putting away the dust extractor.** This safety measure prevents the dust extractor from being started accidentally.

### Start-up

- ▶ **Pay attention to the mains voltage.** The voltage of the power source must correspond with the data on the type plate of the dust extractor.
- ▶ **Make sure you inform yourself about the applicable regulations/laws on how to handle harmful types of dust in your country.**

The dust extractor may be used for vacuuming and extracting the following materials:

- – Dusts with an exposure limit of > 1 mg/m$^3$
- ▶ **Products that are only sold in AUS and NZ:** Use a residual current device (RCD) with a nominal residual current of 30 mA or less.

The dust extractor must categorically not be used in potentially explosive areas.

To ensure optimum suction power, you must always fully unwind the vacuum hose **(29)** from the top part of the dust extractor **(12)**.

#### Adjusting the Suction Power

You can adjust the suction power to a continuously variable degree using the suction power regulator **(9)**.

Set the suction power regulator **(9)** to maximum suction power when completing applications that generate a high level of dust.

Set the suction power regulator **(9)** to the reduced suction power position when completing applications that generate a low level of dust, and also to regulate the suction between the connected power tool and the surface of the workpiece (e.g. when sanding).

#### Plug socket on the dust extractor

- ▶ **Observe the permitted connected load of the plug socket on the dust extractor. Exceeding the maximum permitted connected load can cause the dust extractor to be overloaded. The motor protection device will be triggered.** Send the dust extractor to an authorised **Bosch** after-sales service centre.

The plug socket for power tools **(4)** is live as soon as the mains plug of the dust extractor is plugged into the socket and the main switch is in position **1**. It can be used as an external power connection on the dust extractor, e.g. when working with extraction systems. In position **1+**, the automatic start/stop feature of the dust extractor is activated. The dust extractor can be switched on remotely via the connected power tool.

### Dry vacuuming

#### Vacuuming up dust deposits

To **switch on the dust extractor**, turn the main switch **(2)** to position **1**.

To **switch off the dust extractor**, turn the main switch **(2)** to position **0**.

#### Extracting dust that accumulates from working power tools (see figure L)

- ▶ **There must be a sufficient air exchange rate in the room when the exhaust air comes back into the room. Be aware of the corresponding national regulations.**

The dust extractor has an integrated plug socket for power tools **(4)**, which can be used to connect an external power tool. Observe the maximum permitted load of the connected power tool.

Fit the combi power tool adapter **(25)** (see figure **B**).

Insert the combi power tool adapter **(25)** into the extraction outlet of the power tool.

To switch on the **automatic start/stop feature** of the dust extractor, turn the main switch **(2)** to position **1+**.

To **start the dust extractor**, switch on the power tool connected to the plug socket **(4)**. The dust extractor will start automatically.

To **stop dust extraction**, switch the power tool off. The automatic start/stop run-on function will run for up to 15 s longer in order to extract the remaining dust from the vacuum hose.

To **switch off the dust extractor**, turn the main switch **(2)** to position **0**.

**Using the extraction system (accessory)**

Connect the extraction system to the vacuum hose **(29)**.

To **extract dust via the extraction system**, turn the main switch **(2)** to position **1**.

Hold the extraction system up to the wall and switch on the power tool. The negative pressure this creates causes the extraction system to stick to the wall independently.

Switch off the power tool and carefully remove the extraction system from the wall.

To **switch off the dust extractor**, turn the main switch **(2)** to position **0**.

## Wet vacuuming

- ▶ **Do not use the dust extractor to vacuum combustible or explosive liquids, such as petrol, oil, alcohol or solvents. Do not vacuum hot, burning or explosive dust. Do not operate the dust extractor in areas subject to explosion hazards.** Dust, vapours and liquids can ignite or explode.
- ▶ **The dust extractor must not be used as a water pump.** The dust extractor is designed for vacuuming air and vacuuming water mixtures.

**Note:** The requirements for the degree of penetration (dust class L) have only been verified for dry vacuuming.

### Before Starting Wet Extraction

Empty the container **(1)** and remove the plastic bag **(32)** or the fleece filter bag **(40)**.

Check the fill level sensor **(45)** for dirt. The fill level sensor must be clean in order for the dust extractor to switch off automatically when the container is full (see "Cleaning the fill level sensor (see figures **Q**–**R**)", page 16).

- ▶ **During wet extraction, the automatic filter cleaning function must be deactivated.**

Press the automatic filter cleaning button **(8)** to activate manual filter cleaning (see "Manual Filter Cleaning", page 15). This deactivates automatic filter cleaning and LED indicator **A (5)** goes out.

### Vacuuming up liquids

**⚠ WARNING** **If you notice a foam or water leak, switch off the dust extractor immediately and empty the container.** Otherwise, the dust extractor can become damaged.

To **switch on the dust extractor**, turn the main switch **(2)** to position **1**.

The dust extractor is equipped with fill level sensors **(45)**. If the maximum fill level has been reached, the dust extractor automatically switches off and the two LED indicators **A (5)** and **M (6)** flash simultaneously once a second. Restart protection is activated and can be deactivated by switching the dust extractor on and off once.

**Note:** Check the fill level regularly and empty the container in good time.

To **switch off the dust extractor**, turn the main switch **(2)** to position **0**.

Hold the container **(1)** in the rear handle section **(21)** and twist it forwards to drain the liquid.

### After Wet Extraction

After wet vacuuming, always clean the fill level sensor **(45)** (see "Cleaning the fill level sensor (see figures **Q**–**R**)", page 16).

To prevent mould growth after wet extraction:

- – Remove the flat-pleated filter **(34)** and leave this to dry thoroughly.
- – Remove the top part of the dust extractor **(12)**, open the filter cover **(43)** and leave both elements to dry thoroughly.

## Automatic/Manual Filter Cleaning (see figure M)

### Automatic Filter Cleaning

**Note:** The automatic filter cleaning function is set to be on by default when the dust extractor is switched on.

The LED indicator **A (5)** will light up continuously.

When automatic filter cleaning is active, the flat-pleated filter **(34)** is cleaned every 15 s using 2 blasts of air (pulsating noise).

Regular use of the filter cleaning function will increase the service life of the filter.

In order to achieve an optimum filter service life, deactivate the automatic filter cleaning function only in exceptional cases, e.g. for wet extraction.

### Manual Filter Cleaning

Press the manual filter cleaning button **(7)** to run manual filter cleaning. The flat-pleated filter **(34)** is cleaned using 2 blasts of air. The LED indicator **M (6)** will light up white for 2 s. If LED indicator **M (6)** goes out, the next blast of air can be triggered. To do this, press the manual filter cleaning button **(7)** again.

**Note:** For manual filter cleaning, please note that the time interval between each time a button is pressed should be 2–3 s. Continuously pressing the manual filter cleaning button **(7)** multiple times will cause the over-temperature protection of the dust extractor to be activated. The over-

temperature protection will be automatically suspended after a while (see "Rectifying Errors", page 17).

To switch off the manual filter cleaning, press the automatic filter cleaning button **(8)**.

A flat-pleated filter with surface dirt is still fully functional. It is not necessary to clean the flat-pleated filter manually by shaking or blowing it out; this may even damage the filter.

# Maintenance and Service

## Maintenance and Cleaning

- ▶ **Pull the plug out of the socket before cleaning or performing maintenance on the dust extractor, making tool adjustments, changing accessories or putting away the dust extractor.** This safety measure prevents the dust extractor from being started accidentally.
- ▶ **To ensure safe and efficient operation, always keep the dust extractor and the ventilation slots clean.**

In order to avoid safety hazards, if the power supply cord needs to be replaced, this must be done by **Bosch** or by an after-sales service centre that is authorised to repair **Bosch** power tools.

- ▶ **Wear a dust mask when servicing and cleaning the dust extractor.**

Clean the housing of the dust extractor occasionally with a damp cloth.

- ▶ **Do not use compressed air to clean the dust extractor.** The filter or other components may become damaged.

At least once a year a technical inspection of the dust extractor must be carried out by the manufacturer or someone who has been trained (e.g. to check for filter damage, to check that the dust extractor is tight and that the control unit is in perfect working order).

### Cleaning and maintenance after extracting hazardous substances

- All parts that may have come into contact with the hazardous substances must be considered contaminated.
- Vacuum, wipe down and seal the outside of the dust extractor thoroughly before removing it from the area containing the hazardous substances.
- Only clean, dismantle and perform maintenance on the dust extractor if this can be done without endangering yourself or other persons. Wear personal protective equipment for cleaning and maintenance tasks. Undertake the work in a well ventilated room.
- First clean the outside of the dust extractor before dismantling it.
- All parts of the dust extractor that cannot be adequately cleaned must be disposed of in impermeable bags. Please observe the applicable regulations for the disposal of such waste.
- Clean the maintenance area after completing the work.

### Cleaning the container

Wipe the container **(1)** from time to time using a non-abrasive off-the-shelf cleaning product and leave it to dry.

### Cleaning/Changing the Flat-Pleated Filter (see figures N–O)

- ▶ **Hold the filter cover by the closing flap whilst opening it, and make sure that the opened filter cover clicks into the vertical position.** There is a risk of injury if the filter cover falls down.

The suction power is dependent on the condition of the filter. Therefore, the filter should be cleaned regularly.

If the flat-pleated filter **(34)** becomes damaged, replace it immediately.

- Pull on the closing flap **(26)** and twist the filter cover **(43)** upwards until it clicks into the vertical position.
- Hold the flat-pleated filter **(34)** by the supports and take it out from above.
- Use a damp cloth to remove any dust and dirt that accrues around the edge of the container **(1)** when removing the flat-pleated filter **(34)**.
- The flat-pleated filter can be rinsed out under running water.
- Insert the cleaned (or a new) flat-pleated filter **(34)**, ensuring that it is positioned correctly and securely.
- Close the filter cover **(43)**, ensuring you hear it click into place.

### Cleaning the Pre-Filter (see figure P)

- ▶ **The pre-filter must not be wet cleaned.**
- ▶ **Do not reach between the guide handle and the dust extractor from above in order to unlock to pre-filter cover.** Otherwise, your hand might get caught.

Pull the guide handle **(42)** up until the pre-filter cover is freely accessible from the rear.

Press the release button **(28)** of the pre-filter cover **(27)** and take it from the pre-filter compartment.

Remove the pre-filter **(44)**.

Brush down the flaps of the pre-filter with a soft brush.

Place the pre-filter into the pre-filter cover **(27)**.

Place the pre-filter cover **(27)** into the pre-filter compartment and fold it in.

### Cleaning the fill level sensor (see figures Q–R)

Pull the dust extractor's mains plug from the plug socket.

Remove the top part of the dust extractor **(12)**.

Empty the container **(1)**.

Move the float **(46)** or gently tap it to remove the dirt.

Clean the floater **(46)** using a soft cloth.

If necessary, you can also remove the float. To do this, press the locking mechanism **(47)** and remove the float **(46)**.

Clean the magnet **(48)** using a brush.

Reinsert the float **(46)**.

### Storage and transport

- Wrap the power cable around the cable holder **(19)**.
- Insert the accessory into the corresponding brackets.
- Wrap the fitted vacuum hose **(29)** into the compartment for the vacuum hose. Pull up both pull straps **(13)** and hook them into the fastening openings.

- Click the L-BOXX onto the holders **(11)**.
- Remove the plastic bag/fleece filter bag as soon as it is full.
- Only ever carry the dust extractor by the carrying handle **(10)**.
- Store the dust extractor on a level surface in a dry room and secure it so that it cannot be used by unauthorised persons.
- Put the castor brake **(18)** down to hold the castors **(17)** in place.
- To make transporting the dust extractor easier and gentle on the back, completely empty the container or dispose of the full plastic bag/fleece filter bag beforehand.
- Unlock the castor brake **(18)** for pushing or pulling the dust extractor.
- Only use the extended guide handle **(42)** to push or pull the dust extractor. The dust extractor must not be pulled up steps by the guide handle. The carrying handle must be used in this instance.
- When carrying the dust extractor up steps, ensure there is nobody directly behind you, in case the dust extractor should unexpectedly fall.

## Rectifying Errors

▶ **If a fault (e.g. a filter damage) occurs, the dust extractor must be switched off immediately. The fault must be repaired before resuming operation.**

| Problem | Remedy |
|---|---|
| Suction turbine will not switch on. | Check the mains cable, mains plug, fuse, socket and fill level sensors **(45)**. |
| | The main switch **(2)** is set to "automatic start/stop".<br>Set the main switch **(2)** to the "extraction" symbol or switch on the power tool plugged into the plug socket **(4)**. |
| The suction turbine switches off. | During wet extraction, the LED indicators **A** and **M** will flash slowly and simultaneously.<br>Empty the container **(1)**. |
| | During dry extraction, the LED indicators **A** and **M** will flash quickly and simultaneously: The overload protection on the dust extractor socket is activated.<br>Switch off the power tool. |
| The dust extractor shuts down. | The dust extractor is overloaded due to the maximum voltage of the dust extractor plug socket being exceeded: The motor protection device is triggered.<br>Send the dust extractor to an authorised **Bosch** after-sales service centre. |
| The suction turbine will not switch on again after the container has been emptied. | Switch the dust extractor off and wait 5 s before switching it back on. |
| | Clean the fill level sensors **(45)** and the space between the fill level sensors **(45)** using a brush. |
| The suction power is decreasing. | Remove any blockages from the vacuum nozzle, suction tube, vacuum hose **(29)** or flat-pleated filter **(34)**. |
| | Change the plastic bag **(32)**/fleece filter bag **(40)**. |
| | Make sure the filter cover **(43)** is engaged correctly. |
| | Place the top part of the dust extractor **(12)** on correctly and close the catches **(15)**. |
| | Change the flat-pleated filter **(34)**. |
| Dust is escaping during extraction | Check that the flat-pleated filter **(34)** has been fitted correctly. |
| | Change the flat-pleated filter **(34)**. |
| Automatic switch-off (wet extraction) is not working. | Clean the fill level sensors **(45)** and the space between the fill level sensors **(45)** using a brush. |
| | Check the fill level regularly. |
| The automatic filter cleaning function is not working. | Switch to manual mode by pressing the manual filter cleaning button **(7)**.<br>If the problem persists, contact an authorised **Bosch** after-sales service centre. |
| Manual filter cleaning cannot be triggered. | Over-temperature protection of the dust extractor is activated.<br>Pressing the manual filter cleaning button **(7)** continuously ten times has triggered the over-temperature protection. The over-temperature protection will be automatically suspended after 20 s. |

| Problem | Remedy |
|---|---|
| | Pressing the manual filter cleaning button **(7)** continuously 30 times has triggered the over-temperature protection. The over-temperature protection will be automatically suspended after 4 min.<br>If the problem persists, contact an authorised **Bosch** after-sales service centre. |
| The automatic filter cleaning function is not activated. | Contact an authorised **Bosch** after-sales service centre. |

## After-Sales Service and Application Service

**Great Britain**
Tel. Service: (0344) 7360109

**GB Importer:**
Robert Bosch Ltd.
Broadwater Park
North Orbital Road
Uxbridge
UB9 5HJ

**Malaysia**
Tel.: (03) 79663194

In all correspondence and spare parts orders, please always include the 10-digit article number given on the nameplate of the product.

## Disposal

The dust extractor, its accessories and packaging should be recycled in an environmentally friendly manner.

Do not dispose of the dust extractor along with household waste.

**Only for EU countries and United Kingdom:**

Electrical and electronic equipment that is no longer suitable for use must be collected separately and disposed of in an environmentally friendly manner. Use the designated collection systems.Incorrect disposal may cause harmful effects on the environment and human health, due to the potential presence of hazardous substances.

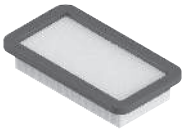

2 608 000 889

2 608 000 886

2 608 000 585

2 608 000 769

2 608 000 887

2 608 000 661

2 608 000 797

2 608 000 806

2 608 000 890

2 608 000 888

2 608 438 691

2 608 001 109

2 608 000 891

| | | | |
|---|---|---|---|
| 5 m | 22 mm | ● | 2 608 000 568 |
| 4 m | 28 mm | ● | 2 608 000 885 |

Servicekontakte
Service Contacts
Contacts de Service
Contactos de Servicio
Контакты сервисных центров

https://www.bosch-pt.com/serviceaddresses

Garantiebedingungen
Guarantee Conditions
Conditions de Garantie
Condiciones de Garantía
Условия гарантии

https://www.bosch-pt.com/guarantee/202601